NOTES:

ALL PRECAST SECTIONS SHALL CONFORM TO THE REQUIREMENTS OF ASTM C-478. ALL POURED IN PLACE CONCRETE SHALL HAVE A 28 DAY STRENGTH OF 3000 P.S.I. AND 2" TO 4" SLUMP.

2. THE MANHOLE BASE MAY BE POURED MONOLITHIC TO 8" ABOVE THE BARREL OF THE MAIN SEWER.

3. BASE CONCRETE SHALL BE 3000 P.S.I., 2-4 IN. SLUMP. FLOW LINES AND INSIDE SURFACES SHALL BE TROWLED SMOOTH & UNIFORM AT TIME OF POUR. MANHOLE BASE MAY BE MONOLITHICALLY CAST TO 8" ABOVE BARREL OF MAIN SEWER. CHANNELS SHALL CONFORM ACCURATELY TO SEWER GRADE. INSTALL BENCHES TO ELEVATION OF SPRINGLINE OF PIPE.

4. CAST-IN-PLACE, MONOLITHIC MANHOLE MAY BE SUBSTITUTED WITH SPECIFIC APPROVAL OF THE ENGINEER.

5. JOINTS SHALL BE CONSTRUCTED SO AS TO BE WATERTIGHT. KENT-SEAL NO. 2 OR APPROVED EQUAL SHALL BE USED ON TONGUE & GROOVE SECTIONS, AND ON RISER RINGS PREMOLDED "O-RING" MAY BE SUBSTITUTED ON BELL & SPIGOT SECTIONS. ALL JOINTS SHALL BE GROUTED WITH PORTLAND CEMENT CONCRETE GROUT & STRUCK EVEN WITH THE WALL.

6. MANHOLES UNDER 6"-0" IN DEPTH FROM RIM TO SHELF SHALL HAVE A TOP SLAB IN LIEU OF CONE. SEE DETAIL SS-2.1

7. ALL SEWER MANHOLES SHALL BE WRAPPED WITH A HEAT SHRINKABLE SLEEVE SYSTEM, WRAPID SEAL OR APPROVED EQUAL.

8. A WATERTIGHT RAINGUARD IS REQUIRED FOR ALL MANHOLE FRAME/COVERS.

9. *WHIRLY GIG © MANHOLE RISER COLLAR SYSTEM MAY BE USED IN PLACE OF RISER RING.*

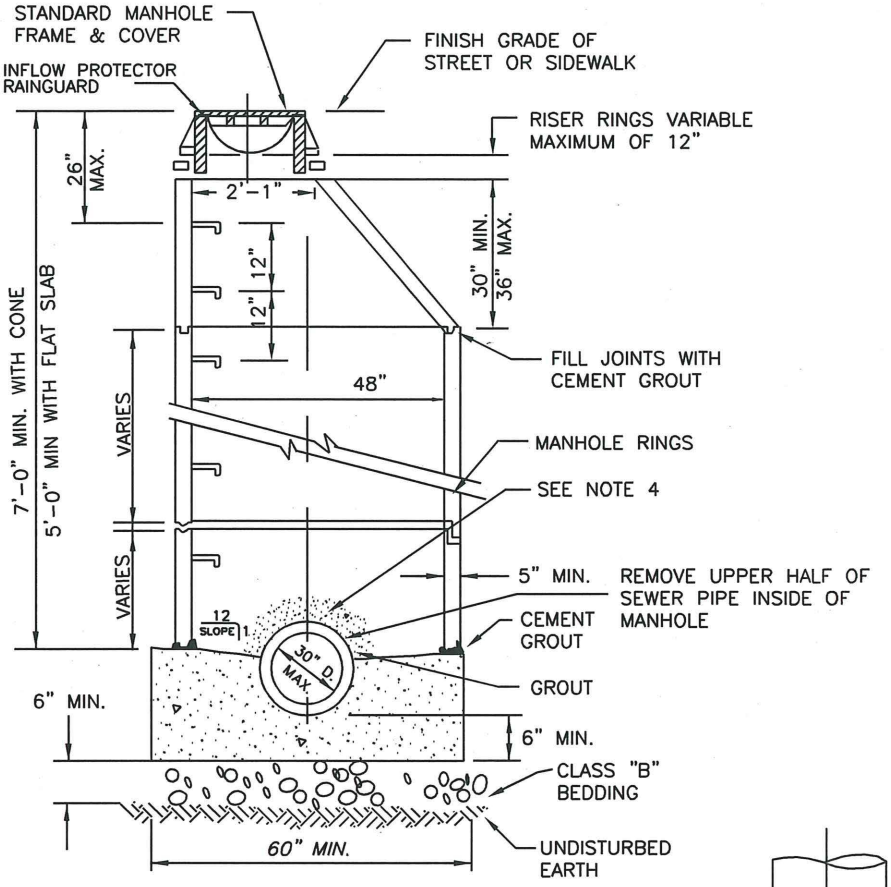

SECTION A - A

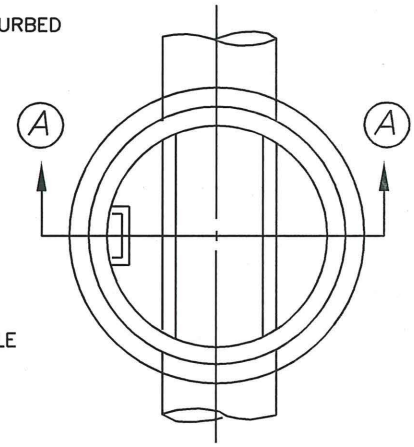

PLAN

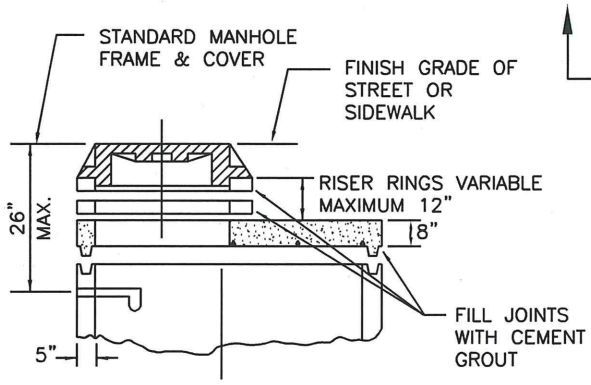

FLAT SLAB ALTERNATE

SAMPLING MANHOLE

PLAN #

CITY OF BATTLE GROUND APPROVED

3-28-07

CITY ENGINEER DATE

REVISIONS:	DATE:	DRAWN:	DESIGNED:
1	8/12/98	BSG	GGH
2	8/30/05	ALL	MCH
3	3/28/07	JMH	MCH

SS-3.2

N:\CAD Data\Standard Dwgs\Sanitary Sewer Details\SS-3.2_Sampling Manhole.dwg 3/28/2007 2:03:51 PM